OptiCool® Positioning and Microscopy

X130 - Integrated Nanopositioners

Many optical applications require precise positioning of the sample to the optical path for focusing or examination of an area of interest. The ability to scan the sample is also required for 2D imaging of sample properties. To meet these needs the OptiCool cryostat can be configured with a piezo-based nanopositioning stack to move your sample in situ. The stack shown consists of X, Y, and Z stages, all with resistive feedback, to give you full motion control and knowledge of your sample position. The nanopositioner option comes with all the adapters needed to mount the nanopositioners onto a pod, specialized cryostat wiring, and cabling that can connect to the piezo controller.

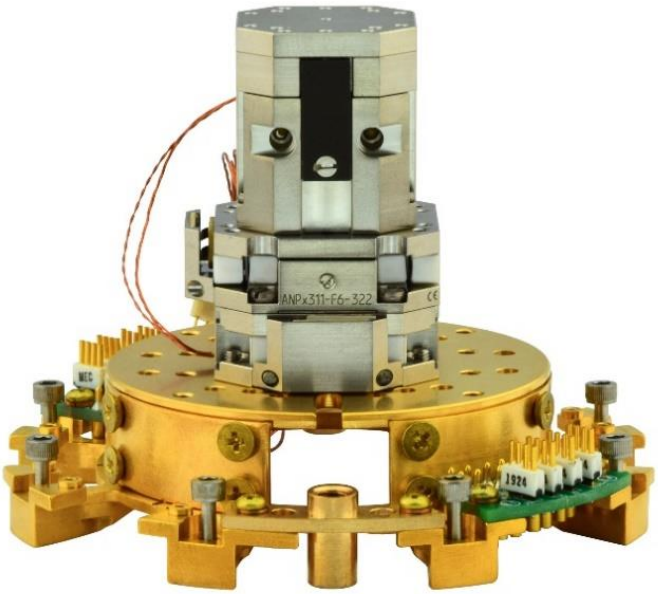

Image shows attocube ANPx311 positioners and ANPz102 positioner with resistive feedback. Positioners are shown mounted on a standard OptiCool pod.

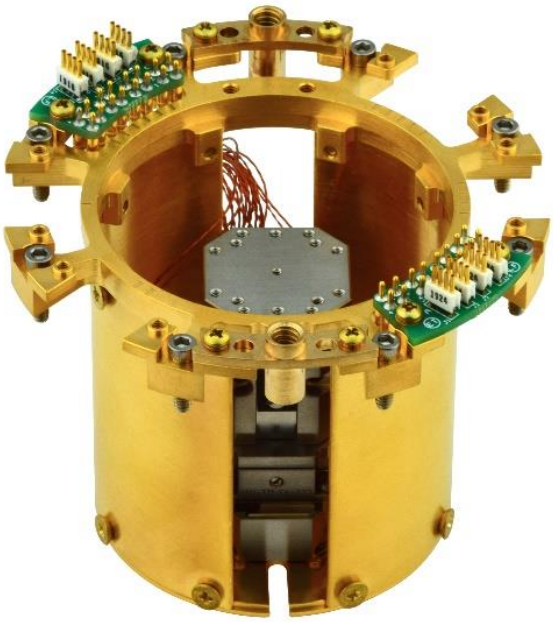

Image shows the attocube nanopositioner stack mounted on an OptiCool large-volume pod to position it lower in the sample space.

A copper thermal stage can also be added to the top of the stack. Flexible straps are utilized to cool the stage and sample. An auxiliary thermometer and associated electronics are included with the OptiCool. The thermometer can be mounted to the stage to get an accurate measurement of the sample temperature. The thermometer uses built in cryostat wiring, leaving sample wires free for experimental use.

The nanopositioner stack can be mounted on the standard pod (pictured above) or on the large-volume pod (pictured at left) depending on experimental needs.

X210 – Low Working-Distance Top Window

A low working-distance (LWD) top window is available for use with external microscope objectives. The standard OptiCool top windows have a minimum working distance of about 15 mm between the top of the outer window and the underside of the inner shield window. With the LWD top window, this distance can be reduced to about 3 mm. This close spacing is achieved with a 0.75 mm thick outer window and a 0.40 mm thick inner window. The outer window is UV fused silica and is epoxied into the window frame to create a low profile, low stress, durable seal. The inner window is also UV fused silica and is held in place with spring clips that minimize stress in the glass at low temperatures and allow easy replacement or removal.

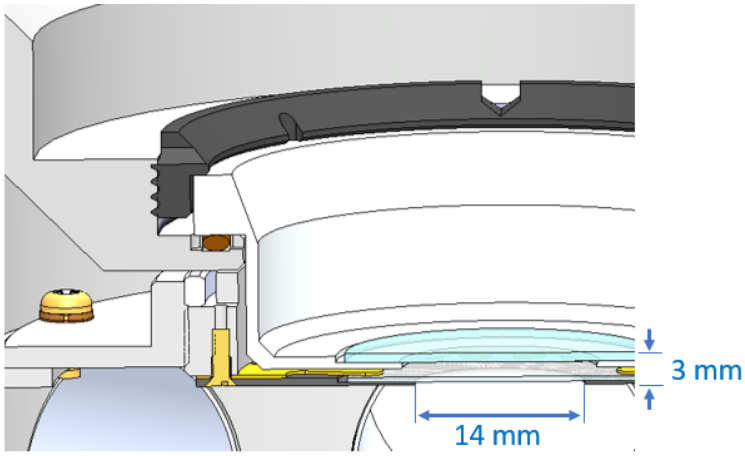

Installed Low Working Distance Window with 0.75mm-thick outer window and 0.40mm-thick inner window.

Both windows have a thickness tolerance of ±0.01 mm and together have a combined thickness of 1.15 mm. This thickness of fused silica matches the optical thickness of 1.10 mm of crown glass, a common correction thickness available in many objectives. Note that while the shield window is required for the ultimate base temperature of your sample, you can remove the shield window if base temperature is not critical and a spacing less than 1mm is required between the outside of the cryostat and your sample.

The clear window diameter at the shield is 14 mm, and because of the high homogeneity of the magnet, the field error across the full diameter at the window is less than 0.3%.

Above the window, you can directly mount objectives at close spacing using the included flared window clamp. The integrated SM3 ID threads can be coupled to an objective using off the shelf adaptor rings. This clamp can be removed and adjusted while the system is cold and under vacuum, allowing the use of multiple objectives during a single cooldown.

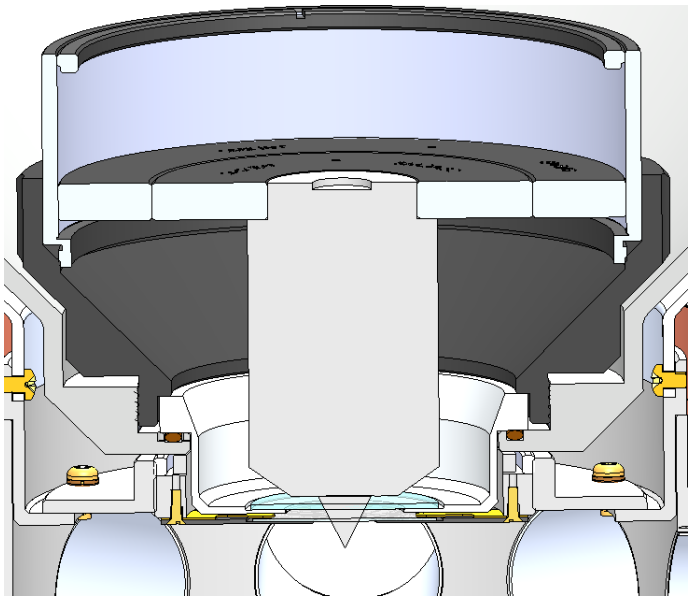

Window clamp with integrated SM3 threads for direct mounting of external objectives.

X200 - Microscope Objective

Many experiments require a high-quality, high-NA objective. To address this need, Quantum Design offers a field-compatible Zeiss 100x LD EC Epiplan-Neofluar, infinity-corrected objective. With a 0.75 NA and a free working distance of 2 mm between your sample and the cold shield aperture, this system offers capable optics with plenty of free space above your sample for convenient mounting. The optics are maintained in vacuum at room temperature to provide the optimal environment to take full advantage of this objective's high performance design.

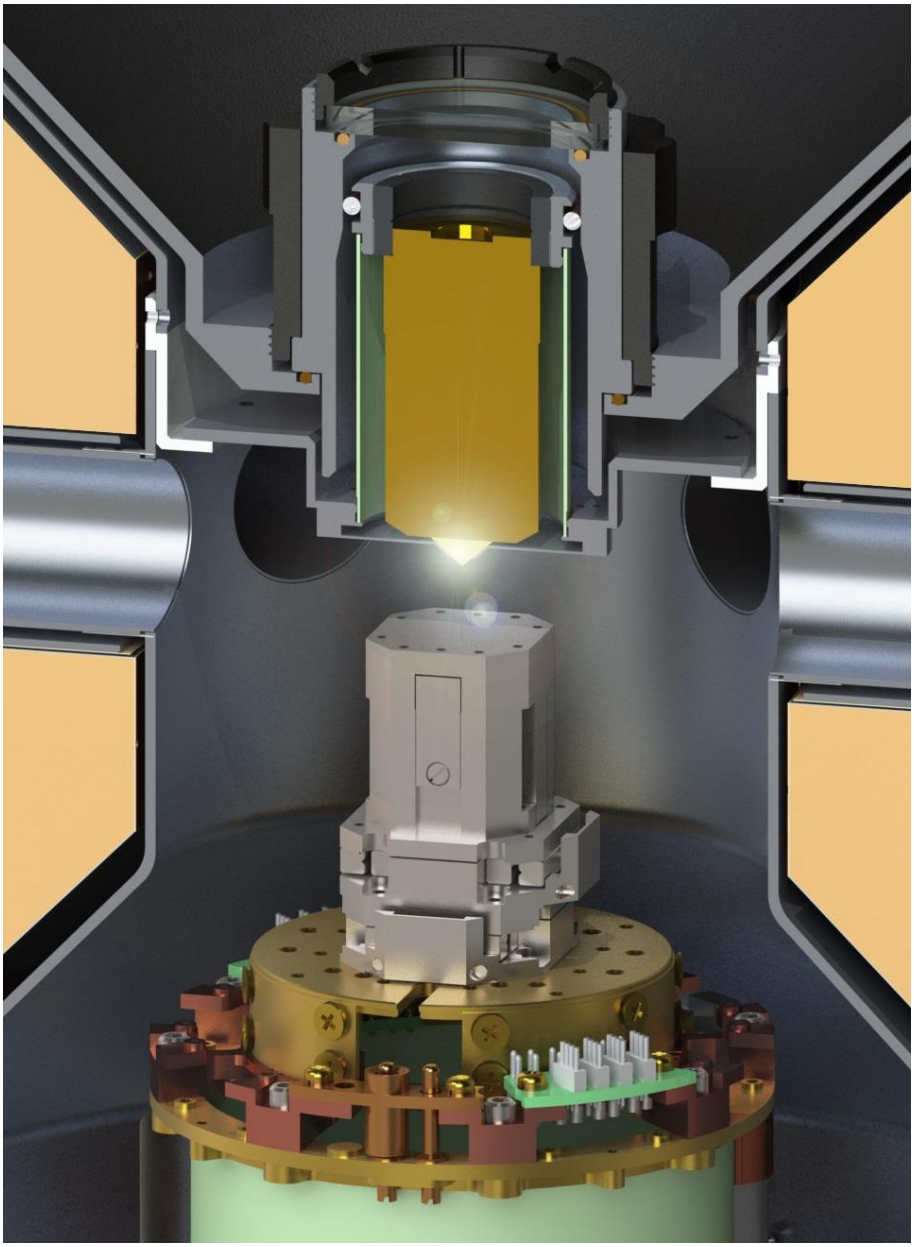

A rendering showing the Zeiss objective and nanopositioners in a cross sectioned view of the OptiCool sample volume.